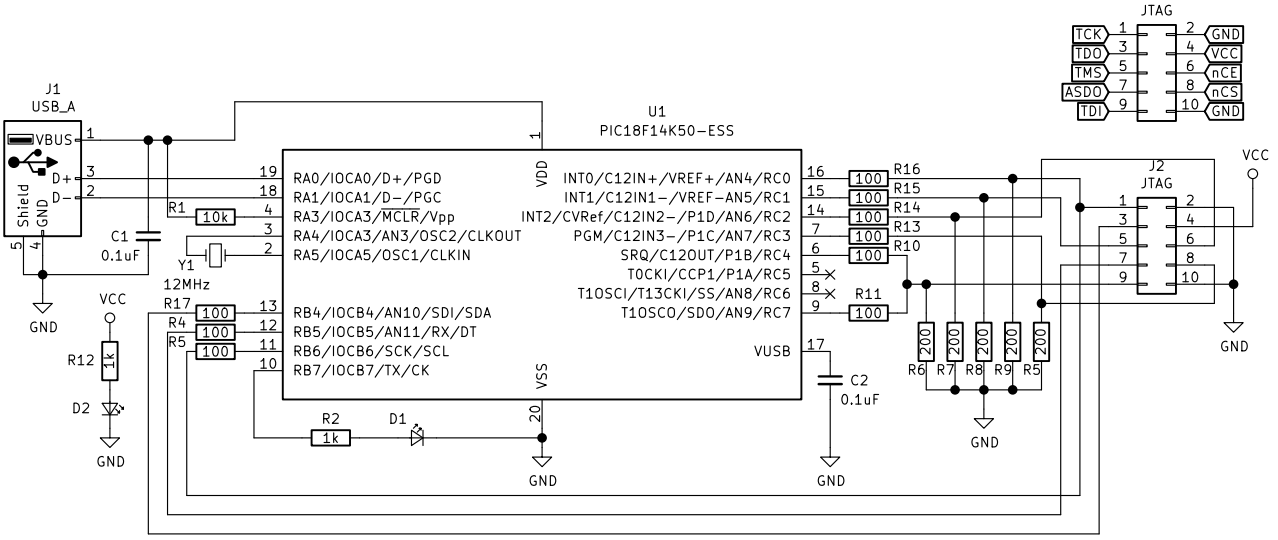

vfiuchcikicshuusrch.ddns.net

vfiuchcikicshuusrch.ddns.net

Sheet: /
File: USBByteBlaster.sch

Title: Altera USB ByteBlaster

Size: User	Date:	**Rev:**
KiCad E.D.A. kicad (5.0.0)		Id: 1/1